Specification Data CS7000E
9/84

Rotary Electric Switches
Series 496

Masoneilan DRESSER

table of contents

General Data 3
Ordering Information 3
Rotary Potentiometer Position Transmitter . . . 4
Parts Reference 5
Dimensions 5

foreword

Switch Function

Series 496 rotary switches are used for electrically indicating one or two predetermined positions in the stroke of a control valve. They may be connected to audible alarms or signal lights for warning of valve or system malfunction. These switches may also be used to actuate solenoids, relays and other electrical devices.

Basic switches in the unit are single pole, double throw snap acting and are individually adjusted by cams on the rotating shaft. Vernier adjustment is made by means of locking type set screws (Nylock) in the cams and these screws actuate the switches by contacting the switch spring levers. The spring levers provide overtravel protection and allow maintained contact when required. The Series 496 is available with either one or two switches, each with an adjustable cam to actuate it.

Transmitter Function

The housing can be fitted with a rotary potentiometer whose output (through a converter) is used for continuous position indication.

The housing and cover are of anodized aluminum and are explosionproof. In addition, O-ring seals in the cover and rotary shaft make the switch waterproof.

Series 496 switches may be mounted on the Camflex®, Sigma F®, Control Ball and MiniTork® II Butterfly valves. Also, the addition of a standard back lever and linkage permits its use with other linear motion valves.

For valve mounting arrangements refer to Masoneilan Instruction ES7000.

© 1992 Masoneilan Division
All Rights Reserved

general data

travel

rotary travel: 360°—switches
❶ 320°—transmitter

max. linear travel: 4″ with standard back lever and linkage

maintained contact: 90° maximum

❶ 0-1000 Ω variable resistance is for 0-320° rotation continuous without stops.

ratings

temperature: −65°F to +180°F

explosion-proof: designed to meet Class I, Groups B, C and D, Class II, Groups E, F and G, Division 1, Class III specifications

weatherproof: NEMA Types 1, 2, 3, 4, 6, 12 and 13 and European explosionproof and weatherproof standards

switches: 10 amps at 125, 250 or 480 volts AC (standard)
❷10 amps at 125 volts or 3 amps at 250 volts DC resistive
❷15 or 20 amps at 125 or 250 volts AC
Double Pole Double Throw 10 amps at 125 or 250 volts AC
0.3 amps at 125 volts DC resistive

❷Differential gap slightly greater with these switches.

materials

housing and cover: anodized aluminum with baked enamel overcoat

shaft: Type 303 stainless steel

O-ring seals: Buna-N

All internal parts are of stainless steel, zinc plated steel or nickel plated brass. No copper bearing alloys are exposed to the atmosphere.

performance

differential gap (reset) with standard switch: 1.5% with 50° travel
1.0% with 90° travel

repeatability: 0.2%

switches

type: single pole, double throw snap acting standard.
double pole, double throw snap acting also available.

actuator: individually adjusted cams

transmitter

rotary potentiometer available for use in travel indicator (other accessories required).

ordering information

Select the appropriate model number from the table:

Model Number	Number of Switches	Switch Type	Detent		Electrical Data
			Rotary Valves	Reciprocating Valves	
496-1	1	SPDT	0.75° at 50° rotation 0.90° at 90° rotation	0.02″ for 2″ stroke or less 0.04″ for more than 2″ stroke	10 amps at 125, 250, or 480 Volts AC
496-2	2	SPDT			
496-3	Transmitter		Rotary Potentiometer		0-1000 ohm = 0-320°
496-6	1	DPDT	10° at 50° rotation 9° at 90° rotation	0.4″ for 2″ stroke or less 0.7″ for more than 2″ stroke	10 amps at 125 or 250 Volts AC 0.3 amps at 125 Volts DC 0.15 amps at 250 Volts DC
496-7	2	DPDT			

rotary potentiometer position transmitter

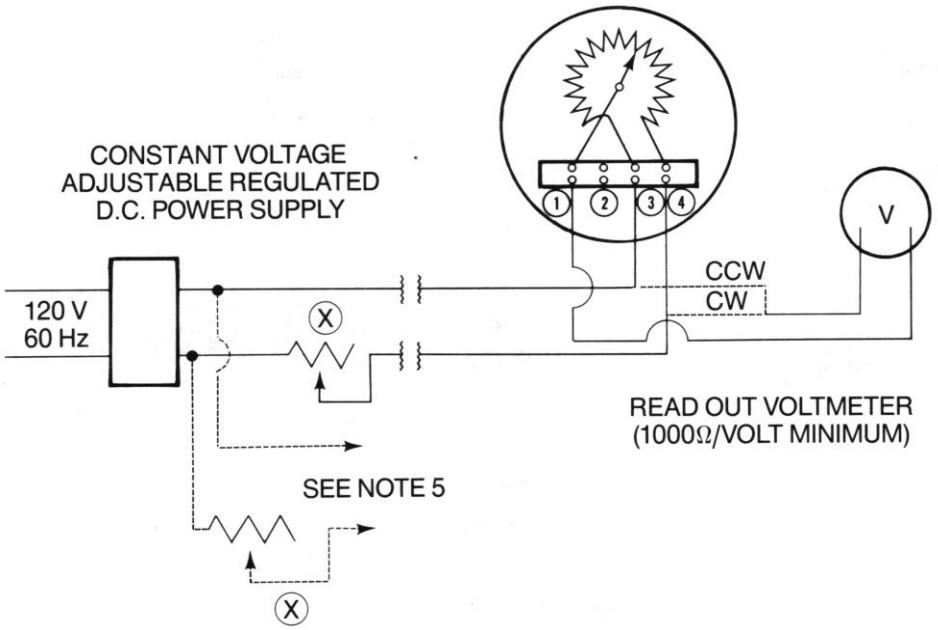

1. Zero is set by orientation of large gear on the rotary shaft. Electrical angle of the potentiometer is 320° and the mechanical angle is continuous; i.e., no mechanical stops. For counterclockwise, valve stem motion gear must be rotated clockwise until output reading just reaches zero without going into deadband area with valve stem fully clockwise.
2. For increasing output with counterclockwise valve stem motion, monitor terminals 1 and 3.
3. For increasing output with clockwise valve stem motion, monitor terminals 1 and 4.
4. Output voltage is set by means of the adjustable power supply. If a non-adjustable power supply is used, an adjustable resistance (potentiometer x) of suitable value must be put into one of the supply leads to the position transmitters and adjusted for the correct output.
5. If additional transmitters are powered from a common supply, they should be wired parallel and a potentiometer put in one of the supply lines to each transmitter for output adjustment.

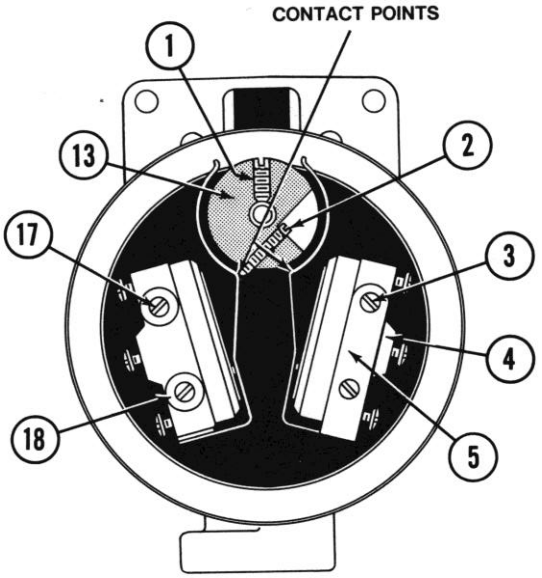

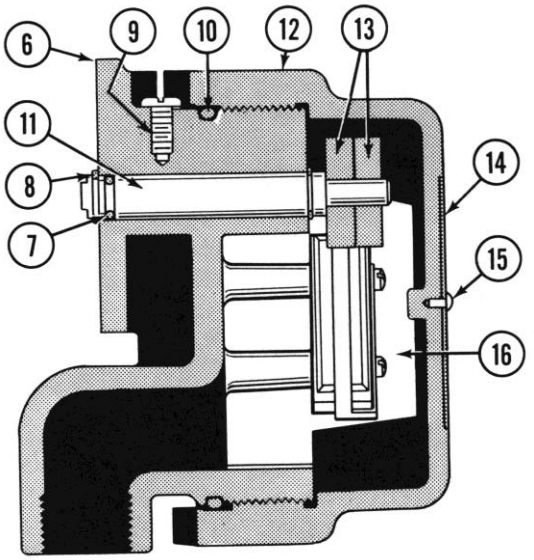

parts reference

Ref. No.	Part Name	Ref. No.	Part Name
1	Screw	10	O-Ring
2	Screw	11	Shaft
3	Screw	12	Cover
4	Microswitch	13	Cam
5	Lever	14	Serial Plate
6	Body	15	Drive Screw
7	O-Ring	16	Insulator
8	Snap Ring	17	Screw
9	Screw	18	Washer

dimensions (inches)

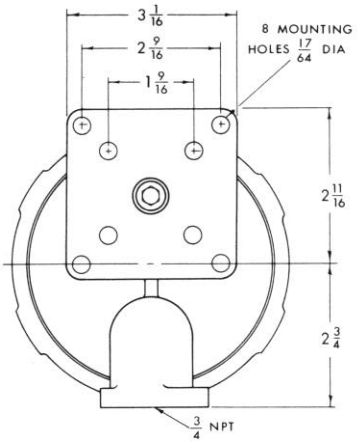

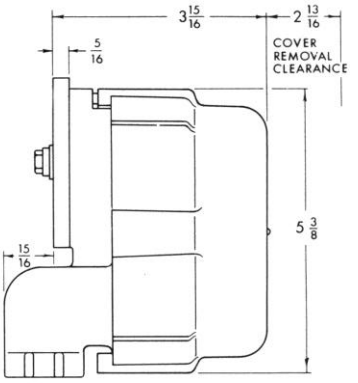

USEFUL EQUIVALENTS

U.S. CUSTOMARY UNITS

Specific gravity of air G = 1 (reference for gases)

U.S. gallon of water = 8.33 lbs @ std. cond.
1 cubic foot of water = 7.48 gallons
Air specific volume = 1/density = 13.1 cubic feet/lb
G of any gas = density of gas/0.076

Specific gravity of water = 1 (reference for liquids)

1 cubic foot of water = 62.34 lbs @ std. cond. (= density)
1 cubic foot of air = 0.076 lbs @ std. cond. (= air density)
Air molecular weight M = 29
G of any gas = molecular wt. of gas/29

$$\text{G of gas at flowing temp.} = \frac{G \times 520}{T + 460}$$

Standard conditions (U.S. customary) are at 14.69 psia & 60°F

Flow conversion of gas

$$SCFH = \frac{Lbs/hr}{density} \qquad SCFH = \frac{Lbs/hr \times 379}{M} \qquad SCFH = \frac{Lbs/hr \times 13.1}{G}$$

Flow conversion of liquid

$$GPM = \frac{Lbs/hr}{500 \times G}$$

Temperature Conversion

F (Fahrenheit) = C(9/5) + 32

C (Celsius) = (F - 32) 5/9

METRIC CONVERSION TABLES

Multiply	By	To Obtain
LENGTH		
millimeters	0.039	inches
centimeters	0.394	inches
inches	2.54	centimeters
feet	30.48	centimeters
feet	0.304	meters
AREA		
sq. centimeters	0.155	sq. inches
sq. centimeters	0.001076	sq. feet
sq. inches	6.452	sq. centimeters
sq. inches	0.00694	sq. feet
sq. feet	929	sq. centimeters
FLOW RATES		
gallons US/minute (GPM)	3.785	liters/min
gallons US/minute	0.133	ft^3/min
gallons US/minute	0.227	m^3/hr
cubic feet/minute	7.481	GPM
cubic feet/hour	0.1247	GPM
cubic feet/hour	0.01667	ft^3/min
cubic meters/hour	4.403	GPM
cubic meters/hour	35.31	ft^3/hr
VELOCITY		
feet per second	0.3048	meters/second
feet per second	1.097	km/hr
feet per second	0.6818	miles/hr

Multiply	By	To Obtain
VOLUME & CAPACITY		
cubic feet	28.32	liters
cubic feet	7.4805	gallons
liters	61.02	cubic inches
liters	0.03531	cubic feet
liters	0.264	gallons
gallons	3785.0	cubic cm
gallons	231.0	cubic inches
gallons	0.1337	cubic feet
WEIGHT		
pounds	0.453	kilogram
kilogram	2.205	pounds
PRESSURE & HEAD		
pounds/sq. inch	0.06895	bar
pounds/sq. inch	0.06804	atmosphere
pounds/sq. inch	0.0703	Kg/cm^2
pounds/sq. inch	2.307	ft of H_20 (4°C)
pounds/sq. inch	0.703	m of H_20 (4°C)
pounds/sq. inch	5.171	cm of Hg (0°C)
pounds/sq. inch	2.036	in of Hg (0°C)
atmosphere	14.69	psi
atmosphere	1.013	bar
atmosphere	1.033	Kg/cm^2
atmosphere	101.3	kPa
bar	14.50	psi
kilogram/sq. cm	14.22	psi
kiloPascal	0.145	psi

Facilities: **Brazil, Canada, France, Germany, Italy, Japan, Mexico, Netherlands, Singapore, Spain, United Kingdom, United States**

Masoneilan DRESSER

Masoneilan North American Operations
Dresser Valve and Control Division
Dresser Industries, Inc.
Marketing Services
15112 Morales Road
P.O. Box 60078 (77205-0078)
Houston, Texas 77032
Tel: (281) 871-6500 Fax: (281) 871-6569

ASAP 20622 11/97 4M